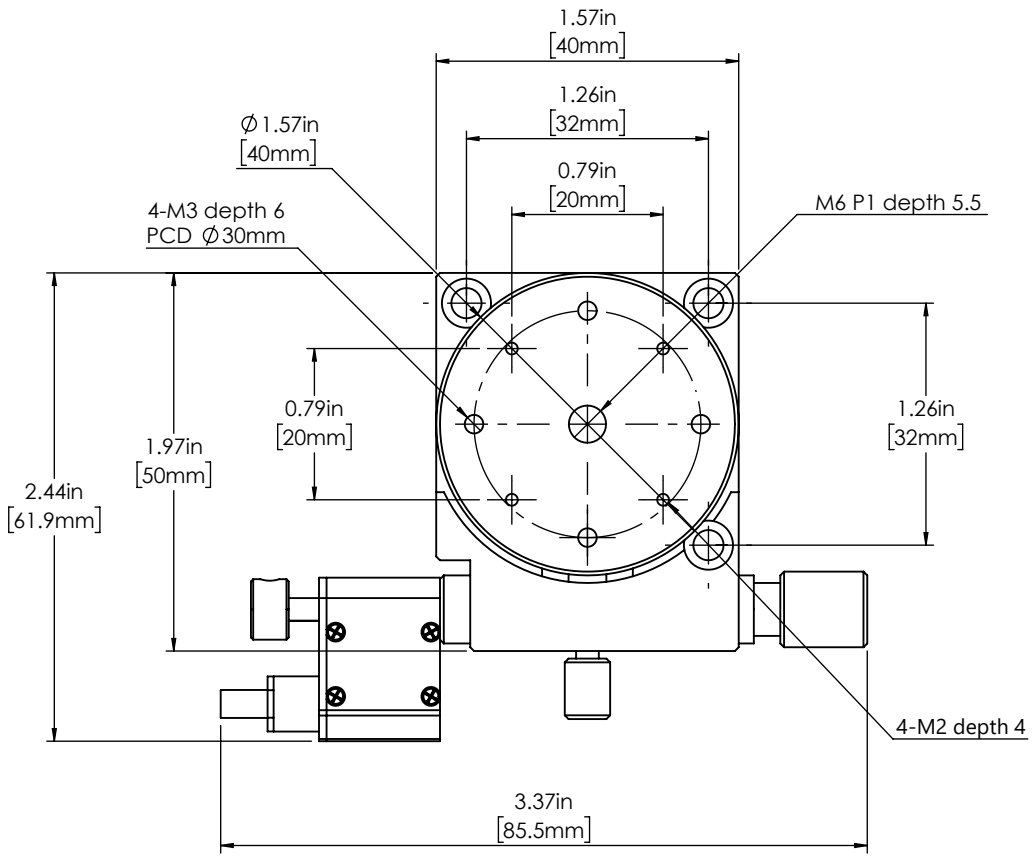

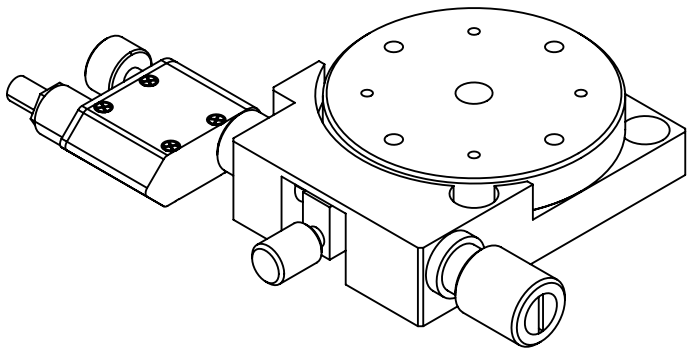

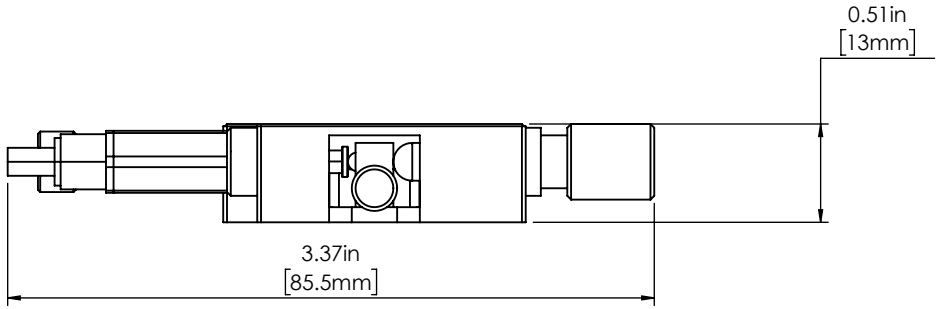

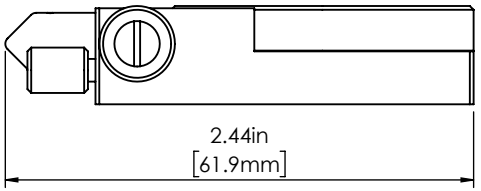

THIS DOCUMENT CONTAINS PROPRIETARY INFOMATION OWNED BY OPTOSIGMA CORP. AND MAY NOT BE USED, DUPLICATED OR DISCLOSED IN WHOLE OR IN PART FROM ANY PURPOSE INCLUDING DESIGN, MANUFACTURE OR PROCUREMENT WITHOUT THE WRITTEN PERMISSION OF OPTOSIGMA CORP.

OptoSigma®
www.optosigma.com

TOLERANCES	
FRACTION ±1/32"	
ANGULAR ±0.5°	
0.X	±.03
0.XX	±.01
0.XXX	±.005
0.XXXX	±.0005

DRAWN BY	DATE 5/5/2023	MATERIAL	Contacts: USA: sales@optosigma.com Europe: sales@optosigma-europe.com	REV.
CHECKED BY	DATE	FINISH		
APPROVED BY	DATE	SCALE	FILE NAME KSP-406M-PDM	Assembly: KSP-406M-PDM

PAGE 1 of 1